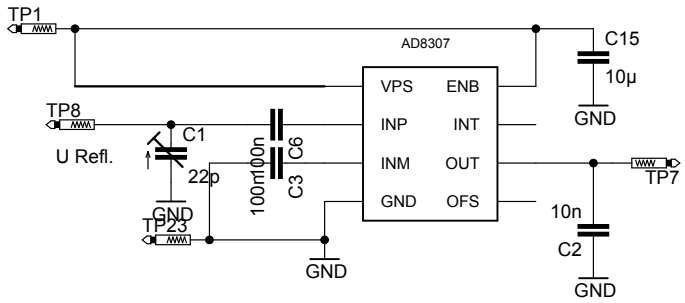
TP1
AD8307
C15
10µ
GND
VPS
ENB
INP
INT
INM
OUT
GND
OFS
TP8
C1
U Refl.
22p
100n
C6
C3
GND
TP23
GND
TP7
10n
C2
GND